GC MODEL STOCK/COMBO

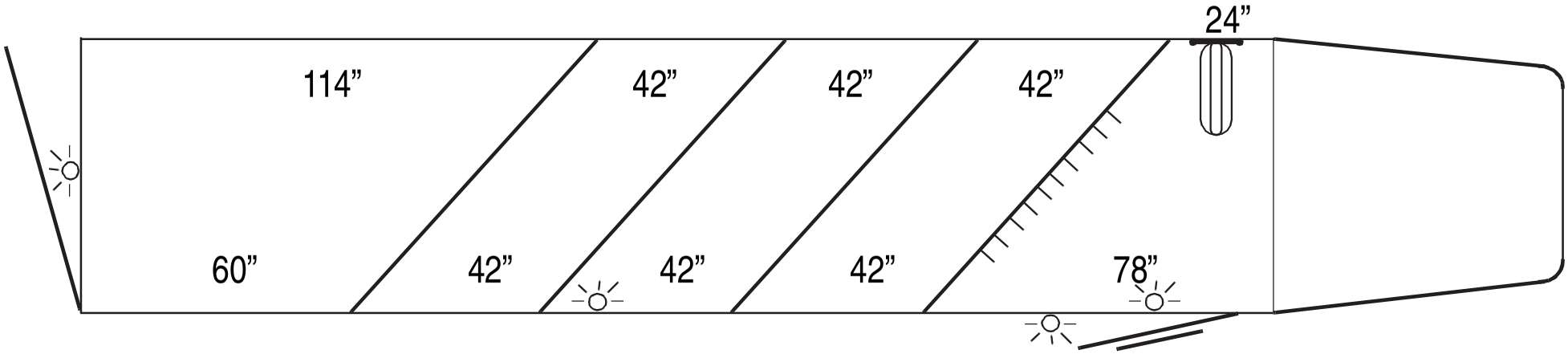

22’ GC MODEL STOCK/COMBO