STRAIGHT LOAD TWO HORSE THOROOUGHBRED

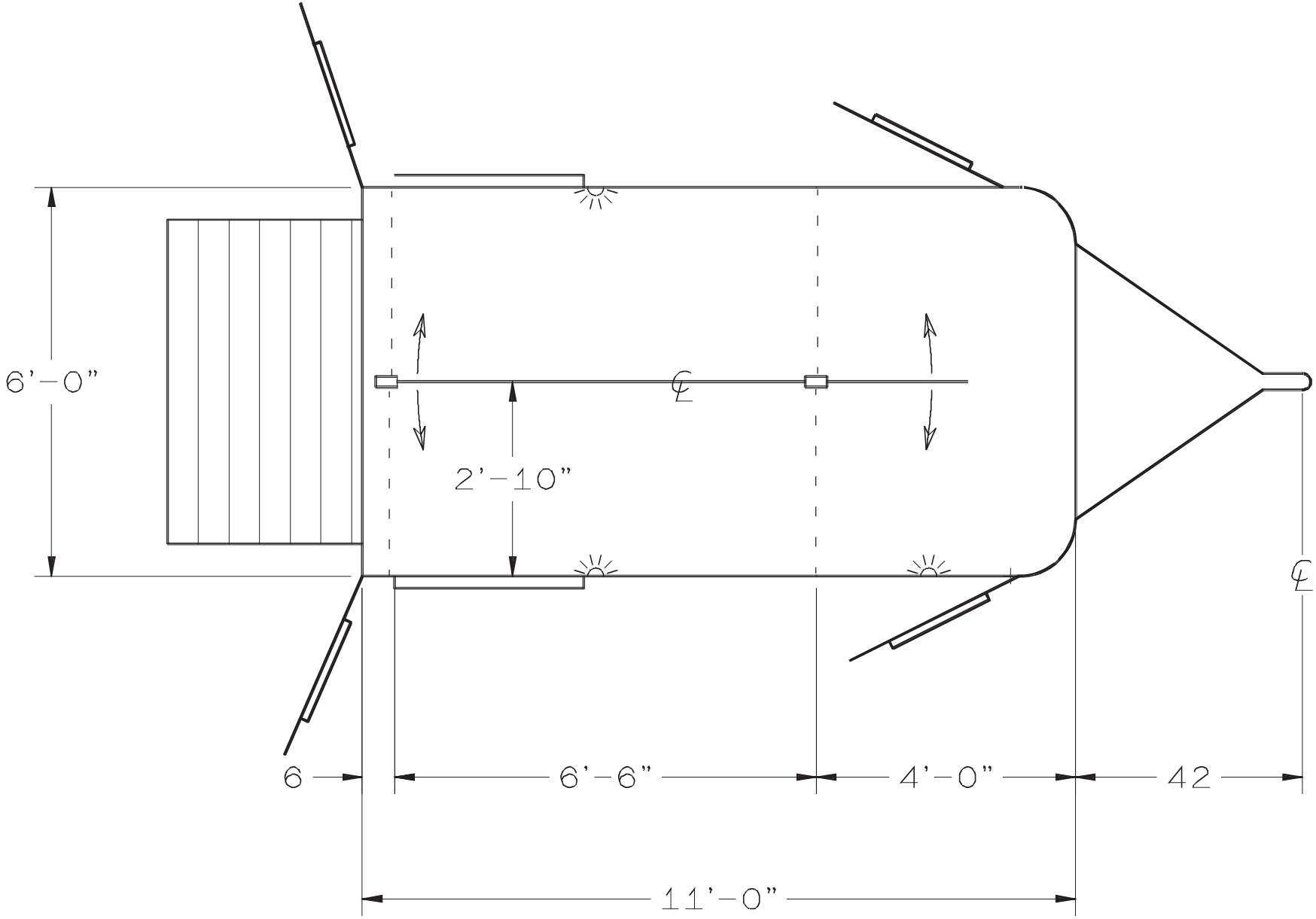

11 X 6 FLAT NOSE BUMPER PULL