STRAIGHT LOAD TWO HORSE THOROUGHBRED

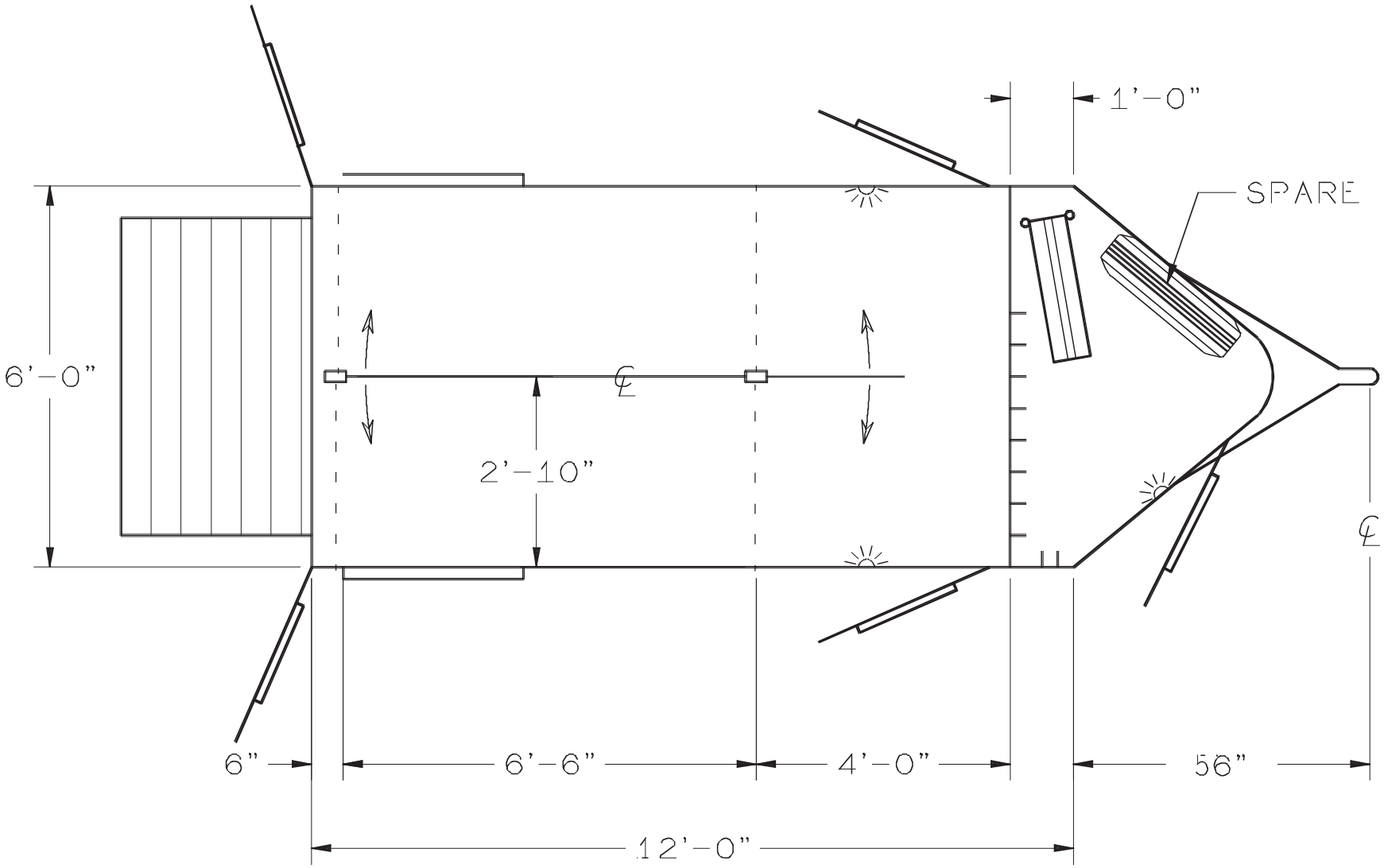

12 X 6 WEDGE NOSE BUMPER PULL W/ DRESSING ROOM