SLANT LOAD THREE, FOUR, FIVE, & SIX HORSE GOOSENECK

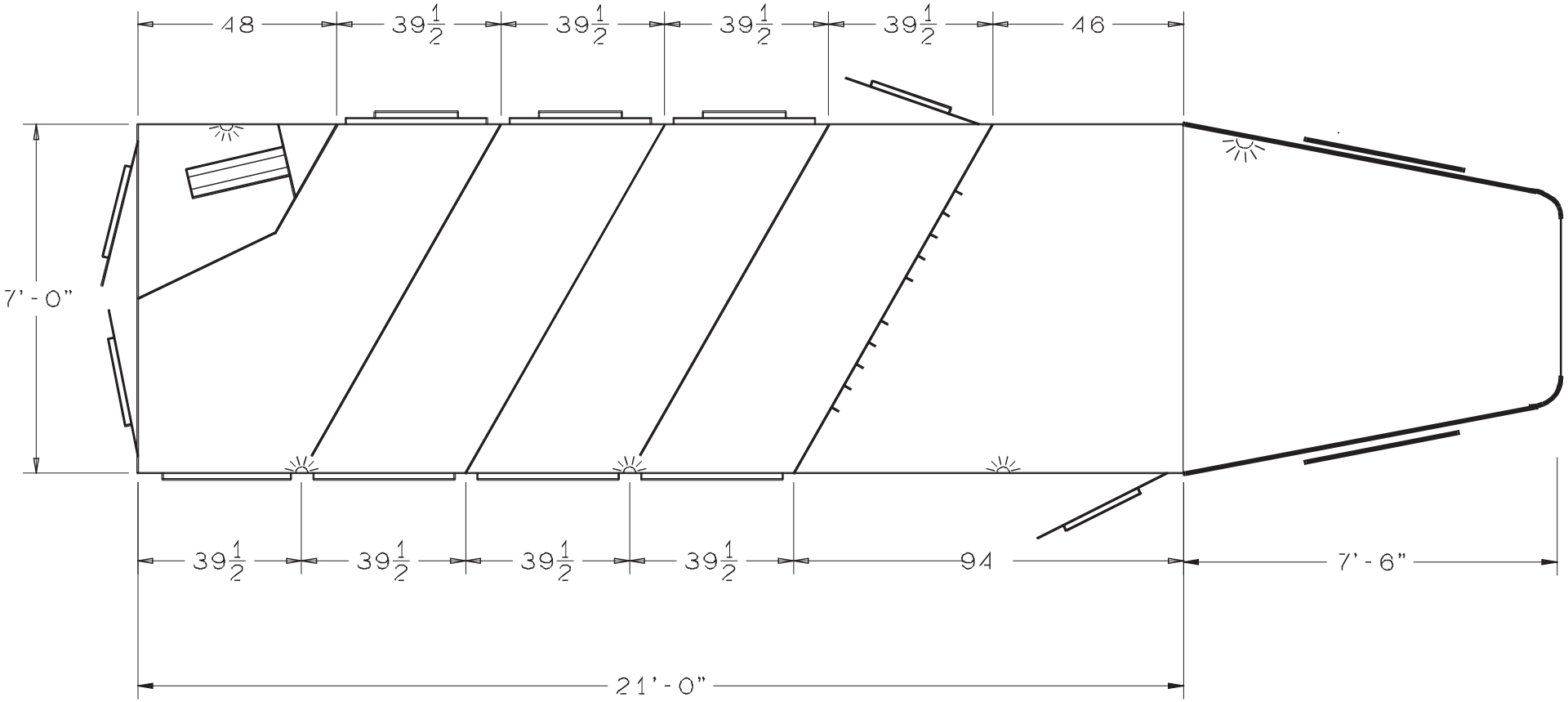

21 x 7 GOOSENECK